United States Patent [19]

Sweeney

[11] Patent Number: 4,850,749

[45] Date of Patent: Jul. 25, 1989

[54] AIRLOCK HAVING FLAPS IN CONTINUOUS FEED OF MATERIAL CARRIED BY A GAS STREAM WHILE OBSTRUCTING FREE FLOW OF GAS

[75] Inventor: William R. Sweeney, Richmond, Va.

[73] Assignee: Philip Morris Incorporated, New York, N.Y.

[21] Appl. No.: 135,145

[22] Filed: Dec. 18, 1987

[51] Int. Cl.[4] B65G 53/08

[52] U.S. Cl. 406/62; 131/84.3; 131/109.1; 198/604; 198/607; 198/690.2; 414/217; 406/78

[58] Field of Search 406/62, 63, 64, 67, 406/72, 74, 80, 81, 82, 51, 52, 65, 68, 77, 79; 131/109.1, 84.3, 287; 414/217, 221; 198/607, 604, 626, 698, 690.2, 689.1, 428, 438, 494

[56] References Cited

U.S. PATENT DOCUMENTS

540,155	5/1895	Dula et al.	406/81 X
1,571,537	2/1926	Berold	131/315
1,675,090	6/1928	Burns et al.	131/315
2,003,141	5/1935	Dorfan	209/150
2,163,833	6/1939	Eissmann	131/312
2,173,087	9/1939	Eissmann	131/312
2,173,088	9/1939	Eissmann	131/312 X
2,643,768	6/1953	Eissmann	209/135
2,667,174	1/1954	Eissmann	131/312
2,701,570	2/1955	Eissmann	131/312
2,851,146	9/1958	Sherrill	198/438 X
2,988,213	6/1961	Davis et al.	209/21
3,043,315	7/1962	Verhappen	131/312
3,046,998	7/1962	Mortimer	131/312
3,091,244	5/1963	Molins et al.	131/84.3
3,116,238	12/1963	Van Etten	209/250
3,237,753	3/1966	Allen et al.	198/689.1 OR
3,360,125	12/1967	Horsey	209/12
3,362,414	1/1968	Wochnowski	131/312
3,367,342	2/1968	Lewis	131/311
3,386,773	6/1968	Ballard, Jr.	406/16 X
3,409,025	11/1968	Wochnowski	131/303 X
3,450,311	6/1969	Bonneric	198/524 X
3,460,869	8/1969	Herr	406/60
3,513,858	5/1970	Pietrucci	131/312
3,514,159	5/1970	Labbe	406/28
3,608,716	9/1971	Rowell et al.	209/139.1
3,655,043	4/1972	Wochnowski	209/138
3,665,932	5/1972	Goldbach	131/280
3,826,065	7/1974	Labbe	131/110 X
3,881,590	5/1975	Hartmann	198/626
3,989,309	11/1976	Preston	406/70
3,991,772	11/1976	Smith, Jr.	131/138
4,009,912	3/1977	Mraz	406/144
4,024,878	5/1977	Labbe	131/84 B
4,135,615	1/1979	Brackmann et al.	198/371
4,166,027	8/1979	Smith	209/139
4,223,685	9/1980	Labbe	131/109
4,259,032	3/1981	Kuhner	406/62
4,264,238	4/1981	Leckband et al.	406/62
4,286,910	9/1981	Conrad	414/221
4,308,876	1/1982	Rothchild	131/293
4,408,619	10/1983	Perkins	131/108
4,446,876	5/1984	Brackman	131/110
4,474,511	10/1984	Labbe	406/70
4,475,562	10/1984	Thatcher et al.	131/110
4,507,876	4/1985	Conrad	34/242
4,557,278	12/1985	Brackmann et al.	131/109.1

FOREIGN PATENT DOCUMENTS

490237	1/1930	Fed. Rep. of Germany
548111	4/1932	Fed. Rep. of Germany
591577	4/1934	Fed. Rep. of Germany
US79/00705	9/1979	PCT Int'l Appl.
206350	11/1923	United Kingdom

Primary Examiner—Joseph F. Peters, Jr.
Assistant Examiner—Gregory R. Poindexter
Attorney, Agent, or Firm—Jeffrey H. Ingerman

[57] ABSTRACT

An airlock for the continuously feeding through of a material while obstructing the free flow of a gas is provided. The airlock comprises a first continuous belt having a plurality of nonporous flaps projecting out from it. Each flap has a free edge located outwardly from the belt. A second belt runs parallel to the first and has elements to seal against the free edges of the flaps of the first belt. A motor moves the belts so that their transport sides move together. Particulates are transported in the chambers formed by belts and flaps while the flow of air between and past the belts is inhibited.

10 Claims, 6 Drawing Sheets

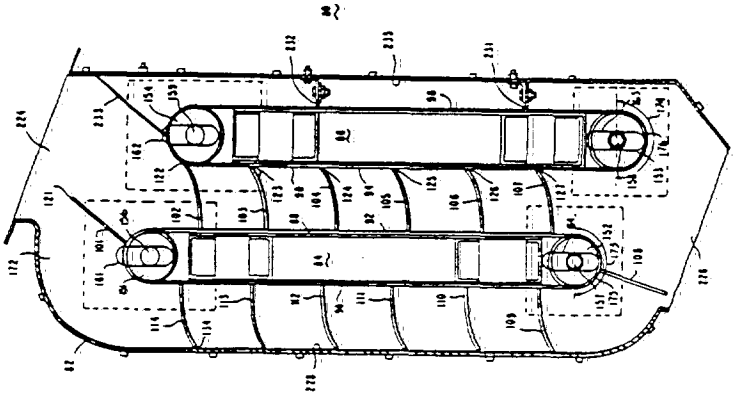

2026230382

Source: https://www.industrydocuments.ucsf.edu/docs/nfjl0000